CONCRETE WINE TANKS
SONOMA CAST STONE

# SQUARE

800 GALLONS / DRY WT 8,000 LBS

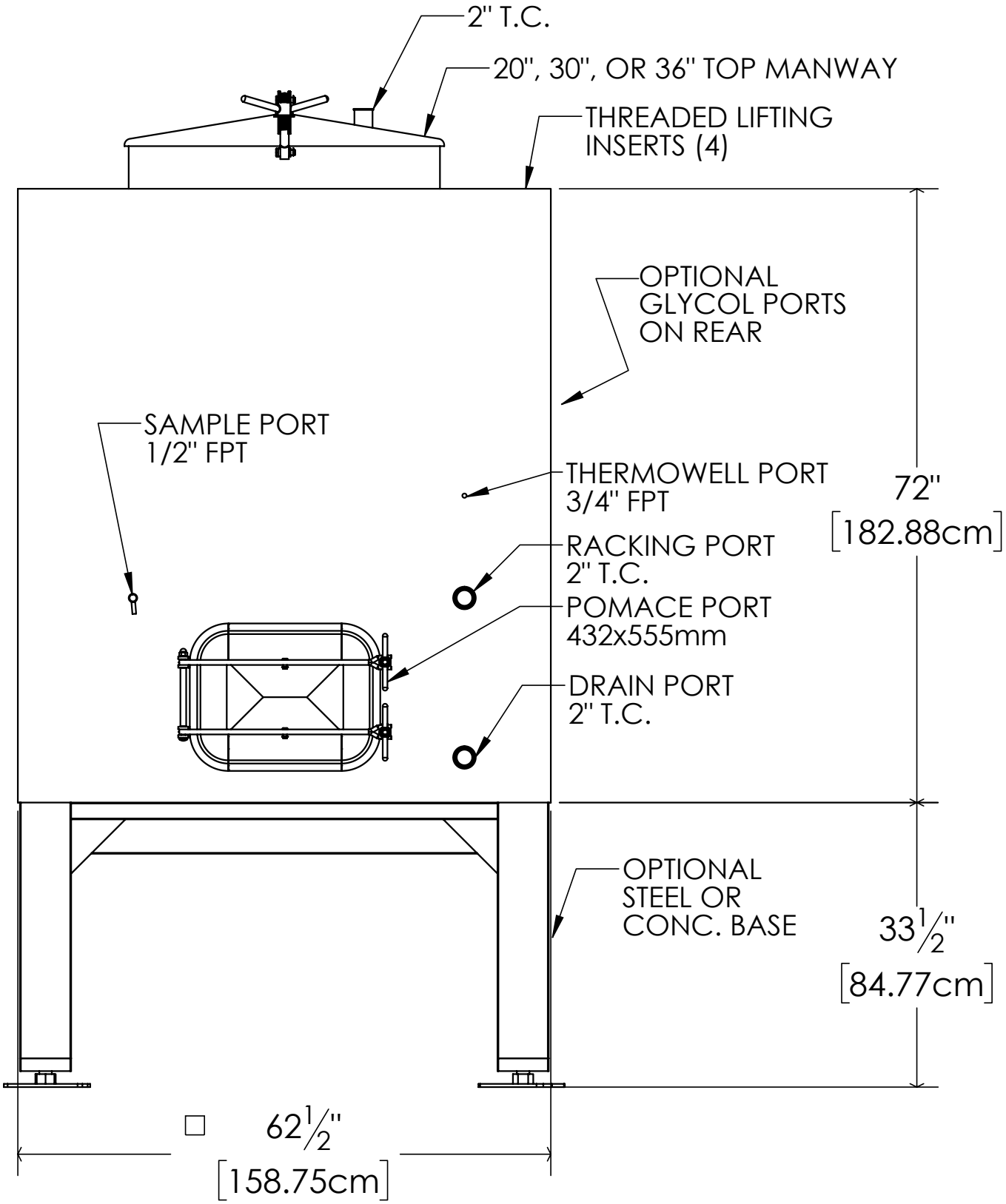


MADE IN U.S.A.